LITHONIA LIGHTING®

DIGITAL NAVIGATION

Ordering Tree nLight Platform Photometrics Performance Data

Catalog Number	
Notes	
Type	

CPXIP LED PANEL

Configurable

1' x 4', 2' x 2'and 2' x 4'

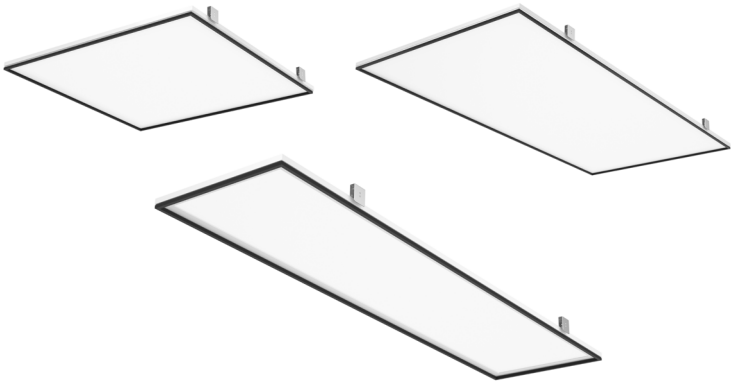

FEATURES & SPECIFICATIONS

INTENDED USE — The CPXIP Series LED is a back-lit panel featuring an external driver. This cost-effective, reliable flat panel is visually comfortable and can be recessed mounted. Suitable for many applications such as healthcare facilities, cleanrooms, behavioral health levels 1-2, and educational applications. The CPX-IPs secondary Polycarbonate and Acrylic lenses provide an IP65 rating on the room side when installed properly. The CPX-IP retains the standard CPX Ingress Protection rating of IP5X from the plenum side. Certain airborne contaminants can diminish the integrity of acrylic. **Click here for Acrylic Environmental Compatibility table for suitable uses**. **U.S. Patent No. 10,681,784.** This product is rated for use in ISO5-9 cleanrooms and will not contaminate the space and will seal the room from the plenum to prevent air flow between the two.

CONSTRUCTION — A metal frame with satin white lens provides excellent shielding and uniform luminance. The full gasketing encloses the fixture and is positioned between the bottom acrylic or polycarbonate lens and the T-grid, creating a barrier to prevent water from seeping into the fixture. CPX's low-profile design provides increased installation flexibility especially in restricted plenum spaces.

ELECTRICAL — Direct-lit Panel with Long-Life LEDs, coupled with a high-efficiency driver, provide superior illumination for extended service life. Greater than 70% LED lumen maintenance at 60,000 hours (L80>60,000). 0-10V dimming driver. Options available for dimming to 1% or 10%. Contains non-isolated dimming leads.

Optional integrated nLight® controls make each luminaire addressable, allowing them to digitally communicate with other nLight enabled controls such as dimmers, switches, nLight AIR RIO. Simply connect all the nLight enabled control devices and the CPX luminaires using standard Cat-5 cabling, or the nLight AIR wireless network. Unique plug-and-play convenience allows devices and luminaires to automatically discover each other and self-commission.

LISTINGS — CSA certified to meet US and Canadian standards. Meets IP65 Rating on the room side. IP5X Rated on the plenum side. Suitable for Indoor Wet Locations - Covered Ceiling only. IC rated. IK10 Rated with Polycarbonate lens. Tested in accordance with ISO 14644-14; suitable for ISO Class 5 -9 positive and negative pressure clean rooms. Rated for NSF/ANSI Standard 2 Light Fixture for Splash Zone and Non-Food Zone.

WARRANTY — 5-year limited warranty. This is the only warranty provided and no other statements in this specification sheet create any warranty of any kind. All other express and implied warranties are disclaimed. Complete warranty terms located at: www.acuitybrands.com/support/warranty/terms-and-conditions

Note: Actual performance may differ as a result of end-user environment and application.
All values are design or typical values, measured under laboratory conditions at 25 °C.
The product images shown are for illustration purposes only and may not be an exact representation of the product.
Specifications subject to change without notice.

5X IP RATED PLENUM SIDE RATING · 65 IP RATED ROOM SIDE RATING · WET LOCATION™ · IK10 RATED LUMINAIRE · C SP US · NSF · NOM · † ISO Class 5-9 · nLIGHT ENABLED · LOW UGR · LED · IC RATED · JOT JUST ONE TOUCH

† Tested in accordance with ISO 14644-14; suitable in ISO Class 5-9 positive and negative pressure clean rooms.

Embed nLight controls today. Prepare for tomorrow.

Now	Tomorrow
User-friendly install	Scalability
Enhanced energy savings	Space configuration
Code compliance	Future-ready

A+ Capable Luminaire

This item is an A+ capable luminaire, which has been designed and tested to provide consistent color appearance and out-of-the-box control compatibility with simple commissioning.

- All configurations of this luminaire meet the Acuity Brands' specification for chromatic consistency
- This luminaire is part of an A+ Certified solution for nLight® control networks when ordered with drivers marked by a shaded background*
- This luminaire is part of an A+ Certified solution for nLight control networks, providing advanced control functionality at the luminaire level, when selection includes driver and control options marked by a shaded background*

To learn more about A+, visit www.acuitybrands.com/aplus.

*See ordering tree for details

A+ Capable options indicated by this color background.

Looking for Contractor Select readily available configurations? Click here to visit Contractor Select™ spec sheet or go to www.contractorselect.com

ORDERING INFORMATION

Example: CPXIP 2X2 3200LM 80CRI 40K ASWM MIN10 ZT MVOLT E10WLCP IP65

Series	Fixture Dimension	Lumen Output		CRI	Color Temperature	Diffuser	Minimum Dimming Level
CPXIP LED Panel IP65	**1X4** 1' X 4'	**Standard lumens:** **2000LM** 2000 Lumens **3200LM** 3200 Lumens **4000LM** 4000 Lumens **5000LM** 5000 Lumens **6000LM** 6000 Lumens	**High Efficiency lumens:** **3200LMHE** 3200 Lumens **4000LMHE** 4000 Lumens	**80CRI** 80 CRI	**30K** 3000K **35K** 3500K **40K** 4000K **50K** 5000K	**ASWM** Acrylic Satin White Lens, Matte **PCSWM** Polycarbonate Satin White Lens, Matte **A12M** Acrylic Lens, 12 Pattern, Matte **PC12M** Polycarbonate Lens, 12 Pattern, Matte	**MIN10** Dims to 10% **MIN1** Dims to 1% ‡
	2X2 2' X 2'	**2000LM** 2000 Lumens **3200LM** 3200 Lumens **4000LM** 4000 Lumens **5000LM** 5000 Lumens **6000LM** 6000 Lumens	**3200LMHE** 3200 Lumens **4000LMHE** 4000 Lumens				
	2X4 2' X 4'	**3000LM** 3000 Lumens **4000LM** 4000 Lumens **5000LM** 5000 Lumens **6000LM** 6000 Lumens **7200LM** 7200 Lumens **8500LM** 8500 Lumens **10000LM** 10000 Lumens ‡	**4000LMHE** 4000 Lumens **5000LMHE** 5000 Lumens				

Dimming ‡	Voltage	Step Level Dimming	Emergency Option
(blank) If Controls are being used. **ZT** Generic 0-10V Dimming **EZT** eldoLED 0-10V Dimming ‡	**MVOLT** MVOLT, 120-277V **120** 120V **277** 277V **347** 347 ‡	**(blank)** None **SLD** Step Level Dimming ‡	**(blank)** No battery **E10WLCP** EM Self-Diagnostic battery pack, 10W Constant Power, Certified in CA Title 20 MAEDBS ‡ **E7W** Emergency Battery Pack, 7W, CA Title 20 Noncompliant ‡ **GTD** Generator Transfer Device ‡

Control Input	Sensor	IP Rating	Options
(blank) No controls	**(blank)** No sensor	**IP65** IP65 rated	**GLR** Fast-blowing fuse ‡ **GMF** Slow-blowing Fuse ‡ **PWS1836** 6' pre-wire, 3/8" diameter, 18 gauge, 1 circuit ‡ **PWS1846** 6' pre-wire, 3/8" diameter, 18 gauge, 2 circuit ‡ **PWS1856LV** 6' pre-wire, 3/8" diameter, 18 gauge, 1 circuit w/ low voltage ‡ **PWS1846 PWSLV** Two cables: one 6' pre-wire, 3/8" diameter, 18 gauge, 2 circuits; one 6' pre-wire, 3/8" diameter, 18 gauge ‡ **DWAM** Anti-Microbial paint **CP** Chicago plenum ‡ **NPLT** Narrow Pallet
NLIGHT nLight enabled **NLIGHTER** nLight enabled, for use with generator supply EM power **NLIGHTLM** nLight enabled with lumen management **NLIGHTERLM** nLight enabled with lumen management, for use with generator supply EM power	**(blank)** No sensor, Control Input function only.		
NLTAIR2 nLight AIR Generation 2 (wireless) enabled ‡ **NLTAIREM2** nLight AIR Generation 2 (wireless) enabled and UL924 Emergency Operation, via power interrupt detection. ‡	**(blank)** No sensor, Control Input function only.		
JOT Wireless room control with "Just One Touch" pairing	**(blank)** No sensor, Control Input function only.		

NOTE: ‡ indicates option chosen has ordering restriction or note. Please reference restrictions/notes chart on next page. Restriction notes are sorted in the sequence they appear in the ordering tree.

© 2024 Acuity Brands Lighting, Inc. All rights reserved. Rev. 06/13/24

OPTION VALUE RESTRICTIONS/ NOTES

‡ Option Value Ordering Notes/ Restrictions	
Option value	**Restriction**
10000LM	Not available with JOT.
MIN1	Required for all Control Input Options, except JOT.
Dimming	If Control Input option selected leave this section blank.
EZT	Not available with 10000LM combined with 2X4.
347	347 not available with SLD, E10WLCP, E7W, and GTD Options.
SLD	Leave **Minimum Dimming Level** and **Dimming** option sections blank. Not available with MIN1, MIN10, EZT, ZT or GTD. Not available with any controls.
E10WLCP, E7W	Not available with 347. Configurations with E10WLCP or E7W to be used in daisy chaining or through wiring will require a Y connector not supplied. If used with CP option the contractor must verify that the Y connector is Chicago Plenum rated.
GTD	Not available with 347, SLD or in 1X4 combined with 6000LM.
NLTAIR2	See UL924 Sequence of Operation Chart below. Can be used as a normal power sensing device for nLight AIR devices and luminaires with EM emergency options .
NLTAIREM2	See UL924 Sequence of Operation Chart below.
GLR, GMF	Must specify voltage, only available with 120 or 277V.
PWS1836	Not available with E10WLCP or E7W.
PWS1846	Only available with E10WLCP, E7W or SLD.
PWS1856LV	Not available with E10WLCP, E7W or Controls.
PWS1846 PWSLV	Not available with Controls or SLD.
CP	CP Not available with PWS1836, PWS1846, PWS1856LV, or PWS1846 PWSLV, NLIGHT, NLIGHTER, NLIGHTLM, NLIGHTERLM options.

ACCESSORIES

Accessories: *Order as separate catalog number.*

ILBLP CP10 HE SD A	IOTA 10 Watt Constant Power, High Efficiency LED Emergency Driver for CA Title 20 ‡
ELA PSDMT	Remote mount tray for ILBLP battery.
RK8BDP 2P U	Disconnect Plug (BDP), 2 Pole, Package of 1
RK8BDP 3P U	Disconnect Plug (BDP), 3 Pole, Package of 1
RK8BDP 2P J10	Disconnect Plug (BDP), 2 Pole, Package of 10
RK8BDP 2P J40	Disconnect Plug (BDP), 2 Pole, Package of 40

Emergency Battery Delivered Lumens

Use the formula below to determine the delivered lumens in emergency mode

Delivered Lumens = 1.25 x P x LPW

P = Output power of emergency driver (10W for PS1055)

LPW = Lumen per watt rating of the luminaire.

Notes

1 For MVOLT only, not available with 347V.

UL924 Sequence of Operation

The below information applies to all nLight AIR devices with an EM option.

- EM devices will remain at their high-end trim and ignore wireless lighting control commands, unless a normal-power-sensed (NPS) broadcast is received at least every 8 seconds.
- Using the CL**AIR**ITY+ mobile app, EM devices must be associated with a group that includes a normal power sensing device to receive NPS broadcasts.
- Only non-emergency rPP20, rLSXR, rSBOR, rSDGR, and nLight AIR luminaires with version 3.4 or later firmware can provide normal power sensing for EM devices. See specification sheets for control devices and luminaires for more information on options that support normal power sensing.

Emergency Battery Pack Options - Field Installable

Battery Model Number	Wattage	Runtime (Minutes)	Lumen Output* @ 120 Lumens/Watt	Other
ILB CP07 2H A	7W	120	840	Storm Shelter/ 2-hour Runtime
ILB CP10 A	10W	90	1200	
ILBLP CP10 HE SD A	10W	90	1200	Title 20, Self Diagnostic
ILBLP CP15 HE SD A	15W	90	1800	Title 20, Self Diagnostic
ILB CP20 HE A	20W	90	2400	Title 20
ILB CP20 HE SD A	20W	90	2400	Title 20, Self Diagnostic

All the above are UL Listed products that are certified for field install external/remote to the fixture.
*Minimum delivered lumen output to assist in product selection for increased fixture mounting height.
The CP10 delivered emergency illumination outperforms legacy 1400 lumen fluorescent emergency ballast.
Please contact us at techsupport@iotaengineering.com for any Emergency Battery related questions.

© 2024 Acuity Brands Lighting, Inc. All rights reserved. Rev. 06/13/24

Lumen Maintenance

Reported Lumen Maintenance	Forecasted Lumen Maintenance
L90 @ 37k Hrs / L80 @ >60k Hrs / L70 @ > 60k Hrs	L90 @ 37k Hrs / L80 @ 76k Hrs / L70 @ 120k Hrs

*Note - Reported LM based on IES standard 6X test period for LM-80 report. Forecasted LM based on TM-21 report extrapolation past 6X LM-80 testing.

CPX compatible with SPOD wall switches.

SPOD

PERFORMANCE DATA

Model #	Lumens	LPW	Watts
CPXIP 2X2 2000LM 80CRI 30K ASWM	2008	128.8	15.0
CPXIP 2X2 2000LM 80CRI 30K A12M	1953	125.2	15.1
CPXIP 2X2 2000LM 80CRI 35K ASWM	2080	133.4	15.0
CPXIP 2X2 2000LM 80CRI 35K A12M	2022	129.7	15.1
CPXIP 2X2 2000LM 80CRI 40K ASWM	2117	135.8	15.0
CPXIP 2X2 2000LM 80CRI 40K A12M	2059	132.0	15.1
CPXIP 2X2 2000LM 80CRI 50K ASWM	2123	136.1	15.0
CPXIP 2X2 2000LM 80CRI 50K A12M	2064	132.3	15.1
CPXIP 2X2 3200LM 80CRI 30K ASWM	3400	113.0	28.9
CPXIP 2X2 3200LM 80CRI 30K A12M	3306	109.8	29.2
CPXIP 2X2 3200LM 80CRI 35K ASWM	3522	117.0	28.9
CPXIP 2X2 3200LM 80CRI 35K A12M	3424	113.8	29.2
CPXIP 2X2 3200LM 80CRI 40K ASWM	3585	119.1	28.9
CPXIP 2X2 3200LM 80CRI 40K A12M	3485	115.8	29.2
CPXIP 2X2 3200LM 80CRI 50K ASWM	3595	119.4	28.9
CPXIP 2X2 3200LM 80CRI 50K A12M	3495	116.1	29.2
CPXIP 2X2 3200LMHE 80CRI 30K ASWM	3400	122.0	26.7
CPXIP 2X2 3200LMHE 80CRI 30K A12M	3306	118.7	27.0
CPXIP 2X2 3200LMHE 80CRI 35K ASWM	3522	126.4	26.7
CPXIP 2X2 3200LMHE 80CRI 35K A12M	3424	122.9	27.0
CPXIP 2X2 3200LMHE 80CRI 40K ASWM	3585	128.7	26.7
CPXIP 2X2 3200LMHE 80CRI 40K A12M	3485	125.1	27.0
CPXIP 2X2 3200LMHE 80CRI 50K ASWM	3595	129.0	26.7
CPXIP 2X2 3200LMHE 80CRI 50K A12M	3495	125.4	27.0
CPXIP 2X2 4000LM 80CRI 30K ASWM	4101	113.0	34.8
CPXIP 2X2 4000LM 80CRI 30K A12M	3987	109.8	35.2
CPXIP 2X2 4000LM 80CRI 35K ASWM	4248	117.0	34.8
CPXIP 2X2 4000LM 80CRI 35K A12M	4130	113.8	35.2
CPXIP 2X2 4000LM 80CRI 40K ASWM	4324	119.1	34.8
CPXIP 2X2 4000LM 80CRI 40K A12M	4204	115.8	35.2
CPXIP 2X2 4000LM 80CRI 50K ASWM	4335	119.4	34.8
CPXIP 2X2 4000LM 80CRI 50K A12M	4215	116.1	35.2
CPXIP 2X2 4000LMHE 80CRI 30K ASWM	4101	118.7	33.2
CPXIP 2X2 4000LMHE 80CRI 30K A12M	3987	115.4	33.5
CPXIP 2X2 4000LMHE 80CRI 35K ASWM	4248	123.0	33.2
CPXIP 2X2 4000LMHE 80CRI 35K A12M	4130	119.6	33.5
CPXIP 2X2 4000LMHE 80CRI 40K ASWM	4324	125.2	33.2
CPXIP 2X2 4000LMHE 80CRI 40K A12M	4204	121.7	33.5
CPXIP 2X2 4000LMHE 80CRI 50K ASWM	4335	125.5	33.2
CPXIP 2X2 4000LMHE 80CRI 50K A12M	4215	122.0	33.5
CPXIP 2X2 5000LM 80CRI 30K ASWM	4979	119.1	40.1
CPXIP 2X2 5000LM 80CRI 30K A12M	4840	115.8	40.5
CPXIP 2X2 5000LM 80CRI 35K ASWM	5156	123.4	40.1
CPXIP 2X2 5000LM 80CRI 35K A12M	5013	119.9	40.5
CPXIP 2X2 5000LM 80CRI 40K ASWM	5249	125.6	40.1
CPXIP 2X2 5000LM 80CRI 40K A12M	5103	122.1	40.5
CPXIP 2X2 5000LM 80CRI 50K ASWM	5263	125.9	40.1
CPXIP 2X2 5000LM 80CRI 50K A12M	5117	122.4	40.5
CPXIP 2X2 6000LM 80CRI 30K ASWM	6100	112.7	51.9
CPXIP 2X2 6000LM 80CRI 30K A12M	5931	109.6	52.5
CPXIP 2X2 6000LM 80CRI 35K ASWM	6318	116.7	51.9

Model #	Lumens	LPW	Watts
CPXIP 2X2 6000LM 80CRI 35K A12M	6142	113.5	52.5
CPXIP 2X2 6000LM 80CRI 40K ASWM	6431	118.8	51.9
CPXIP 2X2 6000LM 80CRI 40K A12M	6253	115.5	52.5
CPXIP 2X2 6000LM 80CRI 50K ASWM	6448	119.2	51.9
CPXIP 2X2 6000LM 80CRI 50K A12M	6269	115.9	52.5
CPXIP 2X4 3000LM 80CRI 30K ASWM	3078	125.3	23.6
CPXIP 2X4 3000LM 80CRI 30K A12M	3009	122.5	23.8
CPXIP 2X4 3000LM 80CRI 35K ASWM	3156	128.5	23.6
CPXIP 2X4 3000LM 80CRI 35K A12M	3085	125.6	23.8
CPXIP 2X4 3000LM 80CRI 40K ASWM	3233	131.6	23.6
CPXIP 2X4 3000LM 80CRI 40K A12M	3160	128.6	23.8
CPXIP 2X4 3000LM 80CRI 50K ASWM	3275	133.3	23.6
CPXIP 2X4 3000LM 80CRI 50K A12M	3201	130.3	23.8
CPXIP 2X4 4000LM 80CRI 30K ASWM	4512	123.0	35.2
CPXIP 2X4 4000LM 80CRI 30K A12M	4410	120.2	35.6
CPXIP 2X4 4000LM 80CRI 35K ASWM	4625	126.0	35.2
CPXIP 2X4 4000LM 80CRI 35K A12M	4521	123.2	35.6
CPXIP 2X4 4000LM 80CRI 40K ASWM	4738	129.1	35.2
CPXIP 2X4 4000LM 80CRI 40K A12M	4631	126.2	35.6
CPXIP 2X4 4000LM 80CRI 50K ASWM	4800	130.8	35.2
CPXIP 2X4 4000LM 80CRI 50K A12M	4692	127.9	35.6
CPXIP 2X4 4000LMHE 80CRI 30K ASWM	4621	132.8	33.4
CPXIP 2X4 4000LMHE 80CRI 30K A12M	4517	129.8	33.8
CPXIP 2X4 4000LMHE 80CRI 35K ASWM	4786	137.5	33.4
CPXIP 2X4 4000LMHE 80CRI 35K A12M	4679	134.4	33.8
CPXIP 2X4 4000LMHE 80CRI 40K ASWM	4872	140.0	33.4
CPXIP 2X4 4000LMHE 80CRI 40K A12M	4762	136.8	33.8
CPXIP 2X4 4000LMHE 80CRI 50K ASWM	4886	140.4	33.4
CPXIP 2X4 4000LMHE 80CRI 50K A12M	4775	137.2	33.8
CPXIP 2X4 5000LM 80CRI 30K ASWM	4747	118.7	38.4
CPXIP 2X4 5000LM 80CRI 30K A12M	4640	116.0	38.8
CPXIP 2X4 5000LM 80CRI 35K ASWM	4866	121.6	38.4
CPXIP 2X4 5000LM 80CRI 35K A12M	4756	118.9	38.8
CPXIP 2X4 5000LM 80CRI 40K ASWM	4985	124.6	38.4
CPXIP 2X4 5000LM 80CRI 40K A12M	4873	121.8	38.8
CPXIP 2X4 5000LM 80CRI 50K ASWM	5050	126.3	38.4
CPXIP 2X4 5000LM 80CRI 50K A12M	4937	123.4	38.8
CPXIP 2X4 5000LMHE 80CRI 30K ASWM	5220	131.1	38.2
CPXIP 2X4 5000LMHE 80CRI 30K A12M	5102	128.2	38.6
CPXIP 2X4 5000LMHE 80CRI 35K ASWM	5406	135.8	38.2
CPXIP 2X4 5000LMHE 80CRI 35K A12M	5284	132.7	38.6
CPXIP 2X4 5000LMHE 80CRI 40K ASWM	5503	138.2	38.2
CPXIP 2X4 5000LMHE 80CRI 40K A12M	5379	135.1	38.6
CPXIP 2X4 5000LMHE 80CRI 50K ASWM	5518	138.6	38.2
CPXIP 2X4 5000LMHE 80CRI 50K A12M	5393	135.5	38.6
CPXIP 2X4 6000LM 80CRI 30K ASWM	5546	132.8	40.1
CPXIP 2X4 6000LM 80CRI 30K A12M	5421	129.8	40.5
CPXIP 2X4 6000LM 80CRI 35K ASWM	5744	137.5	40.1
CPXIP 2X4 6000LM 80CRI 35K A12M	5614	134.4	40.5
CPXIP 2X4 6000LM 80CRI 40K ASWM	5847	140.0	40.1
CPXIP 2X4 6000LM 80CRI 40K A12M	5715	136.8	40.5

Model #	Lumens	LPW	Watts
CPXIP 2X4 6000LM 80CRI 50K ASWM	5863	140.4	40.1
CPXIP 2X4 6000LM 80CRI 50K A12M	5731	137.2	40.5
CPXIP 2X4 7200LM 80CRI 30K ASWM	7109	125.7	54.3
CPXIP 2X4 7200LM 80CRI 30K A12M	6948	122.8	54.9
CPXIP 2X4 7200LM 80CRI 35K ASWM	7363	130.2	54.3
CPXIP 2X4 7200LM 80CRI 35K A12M	7197	127.2	54.9
CPXIP 2X4 7200LM 80CRI 40K ASWM	7495	132.5	54.3
CPXIP 2X4 7200LM 80CRI 40K A12M	7326	129.5	54.9
CPXIP 2X4 7200LM 80CRI 50K ASWM	7515	132.9	54.3
CPXIP 2X4 7200LM 80CRI 50K A12M	7346	129.9	54.9
CPXIP 2X4 8500LM 80CRI 30K ASWM	8478	119.6	68.0
CPXIP 2X4 8500LM 80CRI 30K A12M	8287	116.9	68.8
CPXIP 2X4 8500LM 80CRI 35K ASWM	8781	123.9	68.0
CPXIP 2X4 8500LM 80CRI 35K A12M	8582	121.1	68.8
CPXIP 2X4 8500LM 80CRI 40K ASWM	8938	126.1	68.0
CPXIP 2X4 8500LM 80CRI 40K A12M	8736	123.3	68.8
CPXIP 2X4 8500LM 80CRI 50K ASWM	8962	126.4	68.0
CPXIP 2X4 8500LM 80CRI 50K A12M	8760	123.6	68.8
CPXIP 2X4 10000LM 80CRI 30K ASWM	10005	114.3	84.1
CPXIP 2X4 10000LM 80CRI 30K A12M	9779	111.7	84.9
CPXIP 2X4 10000LM 80CRI 35K ASWM	10362	118.3	84.1
CPXIP 2X4 10000LM 80CRI 35K A12M	10129	115.7	84.9
CPXIP 2X4 10000LM 80CRI 40K ASWM	10548	120.5	84.1
CPXIP 2X4 10000LM 80CRI 40K A12M	10310	117.8	84.9
CPXIP 2X4 10000LM 80CRI 50K ASWM	10577	120.8	84.1
CPXIP 2X4 10000LM 80CRI 50K A12M	10338	118.1	84.9
CPXIP 1X4 2000LM 80CRI 30K ASWM	1966	114.5	16.5
CPXIP 1X4 2000LM 80CRI 30K A12M	1950	113.5	16.7
CPXIP 1X4 2000LM 80CRI 35K ASWM	2016	117.3	16.5
CPXIP 1X4 2000LM 80CRI 35K A12M	1999	116.4	16.7
CPXIP 1X4 2000LM 80CRI 40K ASWM	2065	120.2	16.5
CPXIP 1X4 2000LM 80CRI 40K A12M	2048	119.2	16.7
CPXIP 1X4 2000LM 80CRI 50K ASWM	2092	121.8	16.5
CPXIP 1X4 2000LM 80CRI 50K A12M	2075	120.8	16.7
CPXIP 1X4 3200LM 80CRI 30K ASWM	3103	105.9	28.1
CPXIP 1X4 3200LM 80CRI 30K A12M	3077	105.0	28.4
CPXIP 1X4 3200LM 80CRI 35K ASWM	3181	108.5	28.1
CPXIP 1X4 3200LM 80CRI 35K A12M	3154	107.6	28.4
CPXIP 1X4 3200LM 80CRI 40K ASWM	3259	111.2	28.1
CPXIP 1X4 3200LM 80CRI 40K A12M	3231	110.3	28.4
CPXIP 1X4 3200LM 80CRI 50K ASWM	3301	112.7	28.1
CPXIP 1X4 3200LM 80CRI 50K A12M	3273	111.7	28.4
CPXIP 1X4 3200LMHE 80CRI 30K ASWM	3219	119.3	25.9
CPXIP 1X4 3200LMHE 80CRI 30K A12M	3192	118.3	26.2
CPXIP 1X4 3200LMHE 80CRI 35K ASWM	3334	123.6	25.9
CPXIP 1X4 3200LMHE 80CRI 35K A12M	3306	122.6	26.2
CPXIP 1X4 3200LMHE 80CRI 40K ASWM	3394	125.8	25.9
CPXIP 1X4 3200LMHE 80CRI 40K A12M	3365	124.8	26.2
CPXIP 1X4 3200LMHE 80CRI 50K ASWM	3403	126.2	25.9
CPXIP 1X4 3200LMHE 80CRI 50K A12M	3374	125.1	26.2
CPXIP 1X4 4000LM 80CRI 30K ASWM	3907	110.0	34.1

PHOTOMETRICS

See www.lithonia.com for photometry reports.

© 2024 Acuity Brands Lighting, Inc. All rights reserved. Rev. 06/13/24

PERFORMANCE DATA

Model #	Lumens	LPW	Watts
CPXIP 1X4 4000LM 80CRI 30K A12M	3874	109.1	34.5
CPXIP 1X4 4000LM 80CRI 35K ASWM	4005	112.7	34.1
CPXIP 1X4 4000LM 80CRI 35K A12M	3971	111.8	34.5
CPXIP 1X4 4000LM 80CRI 40K ASWM	4103	115.5	34.1
CPXIP 1X4 4000LM 80CRI 40K A12M	4068	114.5	34.5
CPXIP 1X4 4000LM 80CRI 50K ASWM	4156	117.0	34.1
CPXIP 1X4 4000LM 80CRI 50K A12M	4121	116.0	34.5
CPXIP 1X4 4000LMHE 80CRI 30K ASWM	3988	118.9	32.2
CPXIP 1X4 4000LMHE 80CRI 30K A12M	3954	117.9	32.5
CPXIP 1X4 4000LMHE 80CRI 35K ASWM	4130	123.1	32.2
CPXIP 1X4 4000LMHE 80CRI 35K A12M	4096	122.1	32.5
CPXIP 1X4 4000LMHE 80CRI 40K ASWM	4204	125.3	32.2
CPXIP 1X4 4000LMHE 80CRI 40K A12M	4169	124.3	32.5
CPXIP 1X4 4000LMHE 80CRI 50K ASWM	4216	125.7	32.2
CPXIP 1X4 4000LMHE 80CRI 50K A12M	4180	124.6	32.5
CPXIP 1X4 5000LM 80CRI 30K ASWM	4788	113.3	40.6
CPXIP 1X4 5000LM 80CRI 30K A12M	4748	112.4	41.0
CPXIP 1X4 5000LM 80CRI 35K ASWM	4959	117.4	40.6
CPXIP 1X4 5000LM 80CRI 35K A12M	4918	116.4	41.0
CPXIP 1X4 5000LM 80CRI 40K ASWM	5048	119.5	40.6
CPXIP 1X4 5000LM 80CRI 40K A12M	5006	118.5	41.0
CPXIP 1X4 5000LM 80CRI 50K ASWM	5062	119.8	40.6
CPXIP 1X4 5000LM 80CRI 50K A12M	5020	118.8	41.0
CPXIP 1X4 6000LM 80CRI 30K ASWM	6118	110.3	53.2
CPXIP 1X4 6000LM 80CRI 30K A12M	6067	109.4	53.8
CPXIP 1X4 6000LM 80CRI 35K ASWM	6337	114.3	53.2
CPXIP 1X4 6000LM 80CRI 35K A12M	6283	113.3	53.8
CPXIP 1X4 6000LM 80CRI 40K ASWM	6450	116.3	53.2
CPXIP 1X4 6000LM 80CRI 40K A12M	6396	115.4	53.8
CPXIP 1X4 6000LM 80CRI 50K ASWM	6468	116.6	53.2
CPXIP 1X4 6000LM 80CRI 50K A12M	6413	115.7	53.8
CPXIP 2X2 2000LM 80CRI 30K PCSWM	1862	119.4	13.9
CPXIP 2X2 2000LM 80CRI 30K PC12M	1852	118.7	14.3
CPXIP 2X2 2000LM 80CRI 35K PCSWM	1928	123.6	13.9
CPXIP 2X2 2000LM 80CRI 35K PC12M	1918	123.0	14.3
CPXIP 2X2 2000LM 80CRI 40K PCSWM	1963	125.9	13.9
CPXIP 2X2 2000LM 80CRI 40K PC12M	1952	125.2	14.3
CPXIP 2X2 2000LM 80CRI 50K PCSWM	1968	126.2	13.9
CPXIP 2X2 2000LM 80CRI 50K PC12M	1958	125.5	14.3
CPXIP 2X2 3200LM 80CRI 30K PCSWM	3152	104.7	26.8
CPXIP 2X2 3200LM 80CRI 30K PC12M	3136	104.2	27.7
CPXIP 2X2 3200LM 80CRI 35K PCSWM	3265	108.5	26.8
CPXIP 2X2 3200LM 80CRI 35K PC12M	3248	107.9	27.7
CPXIP 2X2 3200LM 80CRI 40K PCSWM	3324	110.4	26.8
CPXIP 2X2 3200LM 80CRI 40K PC12M	3306	109.8	27.7
CPXIP 2X2 3200LM 80CRI 50K PCSWM	3333	110.7	26.8
CPXIP 2X2 3200LM 80CRI 50K PC12M	3315	110.1	27.7
CPXIP 2X2 3200LMHE 80CRI 30K PCSWM	3152	113.1	24.8
CPXIP 2X2 3200LMHE 80CRI 30K PC12M	3136	112.5	25.6
CPXIP 2X2 3200LMHE 80CRI 35K PCSWM	3265	117.2	24.8
CPXIP 2X2 3200LMHE 80CRI 35K PC12M	3248	116.6	25.6
CPXIP 2X2 3200LMHE 80CRI 40K PCSWM	3324	119.3	24.8
CPXIP 2X2 3200LMHE 80CRI 40K PC12M	3306	118.7	25.6
CPXIP 2X2 3200LMHE 80CRI 50K PCSWM	3333	119.6	24.8
CPXIP 2X2 3200LMHE 80CRI 50K PC12M	3315	119.0	25.6
CPXIP 2X2 4000LM 80CRI 30K PCSWM	3802	104.7	32.3
CPXIP 2X2 4000LM 80CRI 30K PC12M	3782	104.2	33.4
CPXIP 2X2 4000LM 80CRI 35K PCSWM	3938	108.5	32.3
CPXIP 2X2 4000LM 80CRI 35K PC12M	3917	107.9	33.4
CPXIP 2X2 4000LM 80CRI 40K PCSWM	4008	110.4	32.3
CPXIP 2X2 4000LM 80CRI 40K PC12M	3987	109.8	33.4
CPXIP 2X2 4000LM 80CRI 50K PCSWM	4019	110.7	32.3
CPXIP 2X2 4000LM 80CRI 50K PC12M	3998	110.1	33.4
CPXIP 2X2 4000LMHE 80CRI 30K PCSWM	3802	110.1	30.7
CPXIP 2X2 4000LMHE 80CRI 30K PC12M	3782	109.5	31.8
CPXIP 2X2 4000LMHE 80CRI 35K PCSWM	3938	114.0	30.7
CPXIP 2X2 4000LMHE 80CRI 35K PC12M	3917	113.4	31.8
CPXIP 2X2 4000LMHE 80CRI 40K PCSWM	4008	116.1	30.7
CPXIP 2X2 4000LMHE 80CRI 40K PC12M	3987	115.4	31.8
CPXIP 2X2 4000LMHE 80CRI 50K PCSWM	4019	116.4	30.7
CPXIP 2X2 4000LMHE 80CRI 50K PC12M	3998	115.7	31.8
CPXIP 2X2 5000LM 80CRI 30K PCSWM	4616	110.4	37.2

Model #	Lumens	LPW	Watts
CPXIP 2X2 5000LM 80CRI 30K PC12M	4591	109.8	38.5
CPXIP 2X2 5000LM 80CRI 35K PCSWM	4780	114.4	37.2
CPXIP 2X2 5000LM 80CRI 35K PC12M	4755	113.8	38.5
CPXIP 2X2 5000LM 80CRI 40K PCSWM	4866	116.4	37.2
CPXIP 2X2 5000LM 80CRI 40K PC12M	4840	115.8	38.5
CPXIP 2X2 5000LM 80CRI 50K PCSWM	4879	116.7	37.2
CPXIP 2X2 5000LM 80CRI 50K PC12M	4853	116.1	38.5
CPXIP 2X2 6000LM 80CRI 30K PCSWM	5655	104.5	48.2
CPXIP 2X2 6000LM 80CRI 30K PC12M	5625	103.9	49.8
CPXIP 2X2 6000LM 80CRI 35K PCSWM	5857	108.2	48.2
CPXIP 2X2 6000LM 80CRI 35K PC12M	5826	107.7	49.8
CPXIP 2X2 6000LM 80CRI 40K PCSWM	5962	110.2	48.2
CPXIP 2X2 6000LM 80CRI 40K PC12M	5930	109.6	49.8
CPXIP 2X2 6000LM 80CRI 50K PCSWM	5978	110.5	48.2
CPXIP 2X2 6000LM 80CRI 50K PC12M	5946	109.9	49.8
CPXIP 2X4 3000LM 80CRI 30K PCSWM	2854	116.2	21.9
CPXIP 2X4 3000LM 80CRI 30K PC12M	2854	116.2	22.6
CPXIP 2X4 3000LM 80CRI 35K PCSWM	2926	119.1	21.9
CPXIP 2X4 3000LM 80CRI 35K PC12M	2926	119.1	22.6
CPXIP 2X4 3000LM 80CRI 40K PCSWM	2997	122.0	21.9
CPXIP 2X4 3000LM 80CRI 40K PC12M	2997	122.0	22.6
CPXIP 2X4 3000LM 80CRI 50K PCSWM	3036	123.6	21.9
CPXIP 2X4 3000LM 80CRI 50K PC12M	3036	123.6	22.6
CPXIP 2X4 4000LM 80CRI 30K PCSWM	4183	114.0	32.7
CPXIP 2X4 4000LM 80CRI 30K PC12M	4183	114.0	33.8
CPXIP 2X4 4000LM 80CRI 35K PCSWM	4288	116.9	32.7
CPXIP 2X4 4000LM 80CRI 35K PC12M	4288	116.9	33.8
CPXIP 2X4 4000LM 80CRI 40K PCSWM	4393	119.7	32.7
CPXIP 2X4 4000LM 80CRI 40K PC12M	4393	119.7	33.8
CPXIP 2X4 4000LM 80CRI 50K PCSWM	4450	121.3	32.7
CPXIP 2X4 4000LM 80CRI 50K PC12M	4450	121.3	33.8
CPXIP 2X4 4000LMHE 80CRI 30K PCSWM	4284	123.1	31.0
CPXIP 2X4 4000LMHE 80CRI 30K PC12M	4284	123.1	32.0
CPXIP 2X4 4000LMHE 80CRI 35K PCSWM	4437	127.5	31.0
CPXIP 2X4 4000LMHE 80CRI 35K PC12M	4437	127.5	32.0
CPXIP 2X4 4000LMHE 80CRI 40K PCSWM	4517	129.8	31.0
CPXIP 2X4 4000LMHE 80CRI 40K PC12M	4517	129.8	32.0
CPXIP 2X4 4000LMHE 80CRI 50K PCSWM	4529	130.1	31.0
CPXIP 2X4 4000LMHE 80CRI 50K PC12M	4529	130.1	32.0
CPXIP 2X4 5000LM 80CRI 30K PCSWM	4401	110.0	35.6
CPXIP 2X4 5000LM 80CRI 30K PC12M	4401	110.0	36.8
CPXIP 2X4 5000LM 80CRI 35K PCSWM	4511	112.8	35.6
CPXIP 2X4 5000LM 80CRI 35K PC12M	4511	112.8	36.8
CPXIP 2X4 5000LM 80CRI 40K PCSWM	4622	115.5	35.6
CPXIP 2X4 5000LM 80CRI 40K PC12M	4622	115.5	36.8
CPXIP 2X4 5000LM 80CRI 50K PCSWM	4682	117.0	35.6
CPXIP 2X4 5000LM 80CRI 50K PC12M	4682	117.0	36.8
CPXIP 2X4 5000LMHE 80CRI 30K PCSWM	4839	121.6	35.4
CPXIP 2X4 5000LMHE 80CRI 30K PC12M	4839	121.6	36.6
CPXIP 2X4 5000LMHE 80CRI 35K PCSWM	5012	125.9	35.4
CPXIP 2X4 5000LMHE 80CRI 35K PC12M	5012	125.9	36.6
CPXIP 2X4 5000LMHE 80CRI 40K PCSWM	5102	128.2	35.4
CPXIP 2X4 5000LMHE 80CRI 40K PC12M	5101	128.1	36.6
CPXIP 2X4 5000LMHE 80CRI 50K PCSWM	5115	128.5	35.4
CPXIP 2X4 5000LMHE 80CRI 50K PC12M	5115	128.5	36.6
CPXIP 2X4 6000LM 80CRI 30K PCSWM	5142	123.1	37.2
CPXIP 2X4 6000LM 80CRI 30K PC12M	5141	123.1	38.4
CPXIP 2X4 6000LM 80CRI 35K PCSWM	5325	127.5	37.2
CPXIP 2X4 6000LM 80CRI 35K PC12M	5325	127.5	38.4
CPXIP 2X4 6000LM 80CRI 40K PCSWM	5421	129.8	37.2
CPXIP 2X4 6000LM 80CRI 40K PC12M	5421	129.8	38.4
CPXIP 2X4 6000LM 80CRI 50K PCSWM	5435	130.1	37.2
CPXIP 2X4 6000LM 80CRI 50K PC12M	5435	130.1	38.4
CPXIP 2X4 7200LM 80CRI 30K PCSWM	6590	116.5	50.3
CPXIP 2X4 7200LM 80CRI 30K PC12M	6590	116.5	52.0
CPXIP 2X4 7200LM 80CRI 35K PCSWM	6826	120.7	50.3
CPXIP 2X4 7200LM 80CRI 35K PC12M	6826	120.7	52.0
CPXIP 2X4 7200LM 80CRI 40K PCSWM	6948	122.8	50.3
CPXIP 2X4 7200LM 80CRI 40K PC12M	6948	122.8	52.0
CPXIP 2X4 7200LM 80CRI 50K PCSWM	6967	123.2	50.3
CPXIP 2X4 7200LM 80CRI 50K PC12M	6967	123.2	52.0
CPXIP 2X4 8500LM 80CRI 30K PCSWM	7860	110.9	63.1

Model #	Lumens	LPW	Watts
CPXIP 2X4 8500LM 80CRI 30K PC12M	7859	110.9	65.2
CPXIP 2X4 8500LM 80CRI 35K PCSWM	8140	114.8	63.1
CPXIP 2X4 8500LM 80CRI 35K PC12M	8140	114.8	65.2
CPXIP 2X4 8500LM 80CRI 40K PCSWM	8286	116.9	63.1
CPXIP 2X4 8500LM 80CRI 40K PC12M	8286	116.9	65.2
CPXIP 2X4 8500LM 80CRI 50K PCSWM	8309	117.2	63.1
CPXIP 2X4 8500LM 80CRI 50K PC12M	8309	117.2	65.2
CPXIP 2X4 10000LM 80CRI 30K PCSWM	9276	105.9	77.9
CPXIP 2X4 10000LM 80CRI 30K PC12M	9275	105.9	80.6
CPXIP 2X4 10000LM 80CRI 35K PCSWM	9607	109.7	77.9
CPXIP 2X4 10000LM 80CRI 35K PC12M	9607	109.7	80.6
CPXIP 2X4 10000LM 80CRI 40K PCSWM	9779	111.7	77.9
CPXIP 2X4 10000LM 80CRI 40K PC12M	9779	111.7	80.6
CPXIP 2X4 10000LM 80CRI 50K PCSWM	9806	112.0	77.9
CPXIP 2X4 10000LM 80CRI 50K PC12M	9805	112.0	80.6
CPXIP 1X4 2000LM 80CRI 30K PCSWM	1823	106.1	15.3
CPXIP 1X4 2000LM 80CRI 30K PC12M	1849	107.7	15.8
CPXIP 1X4 2000LM 80CRI 35K PCSWM	1869	108.8	15.3
CPXIP 1X4 2000LM 80CRI 35K PC12M	1896	110.4	15.8
CPXIP 1X4 2000LM 80CRI 40K PCSWM	1915	111.5	15.3
CPXIP 1X4 2000LM 80CRI 40K PC12M	1942	113.1	15.8
CPXIP 1X4 2000LM 80CRI 50K PCSWM	1940	112.9	15.3
CPXIP 1X4 2000LM 80CRI 50K PC12M	1968	114.5	15.8
CPXIP 1X4 3200LM 80CRI 30K PCSWM	2876	98.2	26.1
CPXIP 1X4 3200LM 80CRI 30K PC12M	2918	99.6	27.0
CPXIP 1X4 3200LM 80CRI 35K PCSWM	2949	100.6	26.1
CPXIP 1X4 3200LM 80CRI 35K PC12M	2991	102.1	27.0
CPXIP 1X4 3200LM 80CRI 40K PCSWM	3021	103.1	26.1
CPXIP 1X4 3200LM 80CRI 40K PC12M	3065	104.6	27.0
CPXIP 1X4 3200LM 80CRI 50K PCSWM	3060	104.4	26.1
CPXIP 1X4 3200LM 80CRI 50K PC12M	3105	106.0	27.0
CPXIP 1X4 3200LMHE 80CRI 30K PCSWM	2984	110.6	24.0
CPXIP 1X4 3200LMHE 80CRI 30K PC12M	3027	112.2	24.8
CPXIP 1X4 3200LMHE 80CRI 35K PCSWM	3091	114.6	24.0
CPXIP 1X4 3200LMHE 80CRI 35K PC12M	3135	116.2	24.8
CPXIP 1X4 3200LMHE 80CRI 40K PCSWM	3146	116.6	24.0
CPXIP 1X4 3200LMHE 80CRI 40K PC12M	3192	118.3	24.8
CPXIP 1X4 3200LMHE 80CRI 50K PCSWM	3155	117.0	24.0
CPXIP 1X4 3200LMHE 80CRI 50K PC12M	3200	118.7	24.8
CPXIP 1X4 4000LM 80CRI 30K PCSWM	3622	102.0	31.6
CPXIP 1X4 4000LM 80CRI 30K PC12M	3674	103.4	32.7
CPXIP 1X4 4000LM 80CRI 35K PCSWM	3713	104.5	31.6
CPXIP 1X4 4000LM 80CRI 35K PC12M	3766	106.0	32.7
CPXIP 1X4 4000LM 80CRI 40K PCSWM	3804	107.1	31.6
CPXIP 1X4 4000LM 80CRI 40K PC12M	3859	108.6	32.7
CPXIP 1X4 4000LM 80CRI 50K PCSWM	3853	108.5	31.6
CPXIP 1X4 4000LM 80CRI 50K PC12M	3909	110.0	32.7
CPXIP 1X4 4000LMHE 80CRI 30K PCSWM	3697	110.2	29.9
CPXIP 1X4 4000LMHE 80CRI 30K PC12M	3751	111.8	30.9
CPXIP 1X4 4000LMHE 80CRI 35K PCSWM	3829	114.1	29.9
CPXIP 1X4 4000LMHE 80CRI 35K PC12M	3884	115.8	30.9
CPXIP 1X4 4000LMHE 80CRI 40K PCSWM	3898	116.2	29.9
CPXIP 1X4 4000LMHE 80CRI 40K PC12M	3954	117.9	30.9
CPXIP 1X4 4000LMHE 80CRI 50K PCSWM	3908	116.5	29.9
CPXIP 1X4 4000LMHE 80CRI 50K PC12M	3965	118.2	30.9
CPXIP 1X4 5000LM 80CRI 30K PCSWM	4439	105.1	37.6
CPXIP 1X4 5000LM 80CRI 30K PC12M	4504	106.6	38.9
CPXIP 1X4 5000LM 80CRI 35K PCSWM	4598	108.8	37.6
CPXIP 1X4 5000LM 80CRI 35K PC12M	4664	110.4	38.9
CPXIP 1X4 5000LM 80CRI 40K PCSWM	4680	110.8	37.6
CPXIP 1X4 5000LM 80CRI 40K PC12M	4748	112.4	38.9
CPXIP 1X4 5000LM 80CRI 50K PCSWM	4693	111.1	37.6
CPXIP 1X4 5000LM 80CRI 50K PC12M	4761	112.7	38.9
CPXIP 1X4 6000LM 80CRI 30K PCSWM	5672	102.3	49.3
CPXIP 1X4 6000LM 80CRI 30K PC12M	5754	103.8	51.0
CPXIP 1X4 6000LM 80CRI 35K PCSWM	5875	105.9	49.3
CPXIP 1X4 6000LM 80CRI 35K PC12M	5959	107.5	51.0
CPXIP 1X4 6000LM 80CRI 40K PCSWM	5980	107.8	49.3
CPXIP 1X4 6000LM 80CRI 40K PC12M	6066	109.4	51.0
CPXIP 1X4 6000LM 80CRI 50K PCSWM	5996	108.1	49.3
CPXIP 1X4 6000LM 80CRI 50K PC12M	6083	109.7	51.0

© 2024 Acuity Brands Lighting, Inc. All rights reserved. Rev. 06/13/24

nLight Platform

nLight AIR Wireless

CPX with RIO

Simple as 1,2,3

1. Install the nLight® AIR fixtures
2. Install the wireless battery-powered wall switch
3. With the CLAIRITY+ Pro app, pair the fixtures with the wall switch and if desired, customize the sensor settings for the desired outcome

nLight AIR rPODBA 2P DX

Mobile Device

nLight Wired Networking

CPX with nIO

Simple as 1,2,3

1. Install the nLight® Wired fixtures
2. Install the nLight Wired wall switch
3. Connect the fixtures using standard CAT5e cables and the devices will automatically discover each other and work (plug and play)

nLight Wired nPODM 2P DX

nLight embedded fixtures offer:	Customers get:
Manual Dimming	Convenience and visual comfort for occupants
Motion Sensing and/or Daylight Harvesting	Energy savings and code compliance
Fixture or Group Level Control	Ability to configure lighting to the space requirements
Flexibility	Ease of fixture moves, adds and changes
Wireless Wall Switch (nLight AIR Only)	Ease and flexibility of placement
Astronomical and Time of Day Scheduling	Energy savings and building security
Scalable Solution	nLight controls to grow with your business
Future-Ready	nLight platform to set foundation for future upgrades and capabilities

© 2024 Acuity Brands Lighting, Inc. All rights reserved. Rev. 06/13/24

JOT WIRELESS

SensorSwitch JOT Enabled Wireless Solution

Designed with contractors in mind, the SensorSwitch JOT enabled wireless solution offers a straightforward approach to the installation and pairing of lighting fixtures and controls. Absolutely no 0-10V control wires and no mobile apps are needed with JOT enabled products, allowing for lightning speed installation right out of the box.

1. Power: Install JOT enabled fixtures and controls as instructed.
2. Pair: Insert the pairing tool into the pinhole on the wall switch; press and hold any button for 6 seconds.
3. Play: Once paired, each fixture will individually dim down to 10% brightness. All products will be fully functional.

CPX LED Series

SensorSwitch
SPODMRA JOT

© 2024 Acuity Brands Lighting, Inc. All rights reserved. Rev. 06/13/24

CPXIP CROSS SECTION

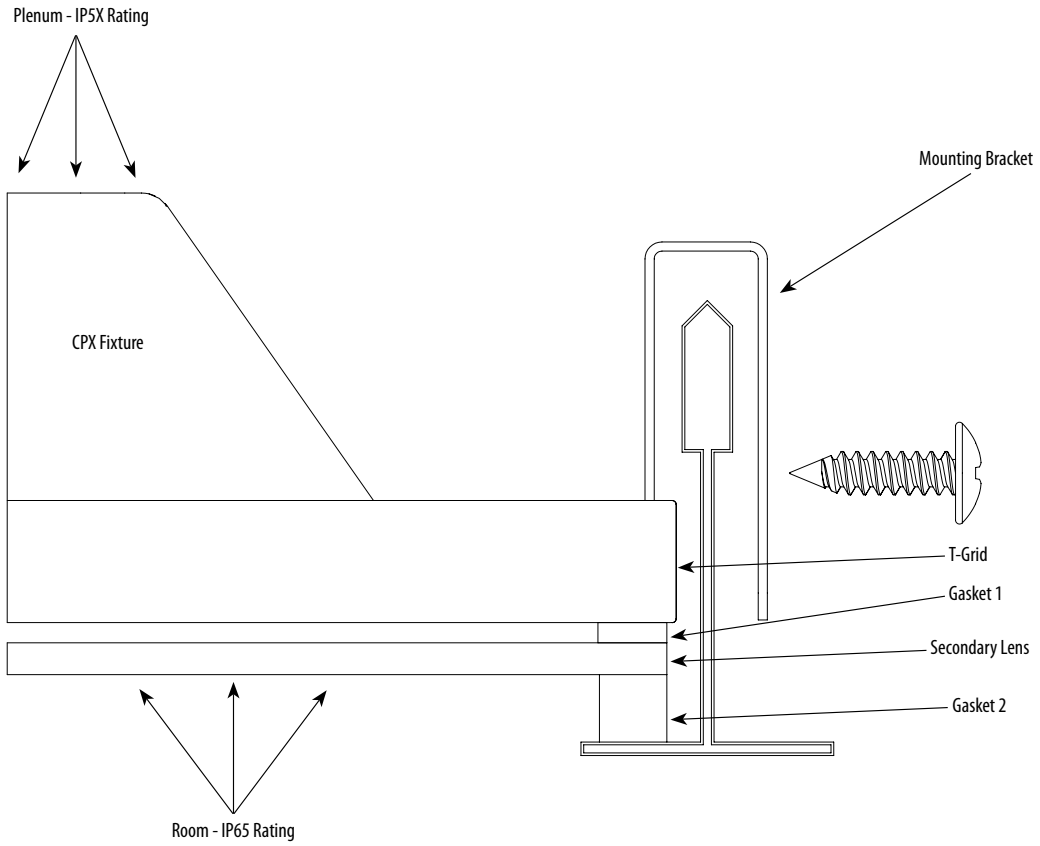

Screws must be applied during installation in order to be IP65 rated on room side.

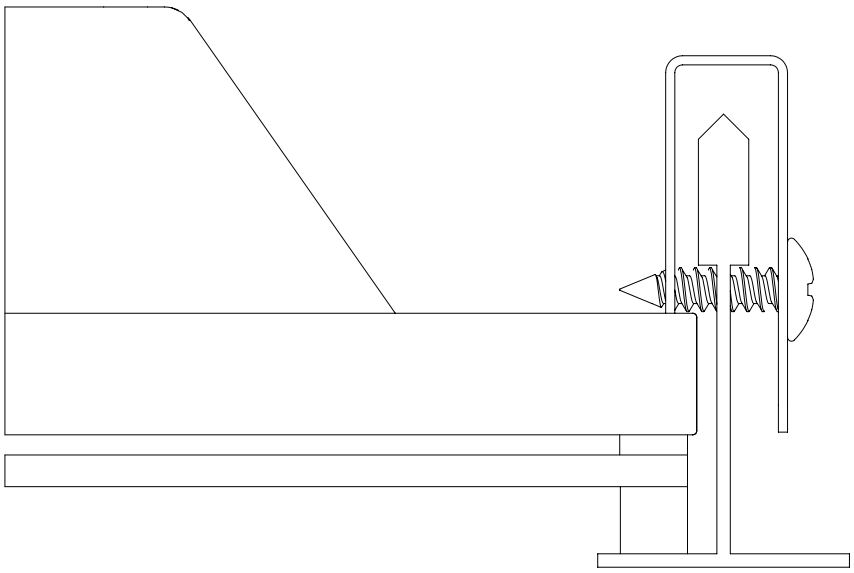

© 2024 Acuity Brands Lighting, Inc. All rights reserved. Rev. 06/13/24

DIMENSIONS

Length: 47.8" 121.4cm
Width: 11.8" 30.0cm
Depth: 2.6" 6.7 cm
Weight:
Unit: 9.25 lbs
Unit Carton: 10.25 lbs

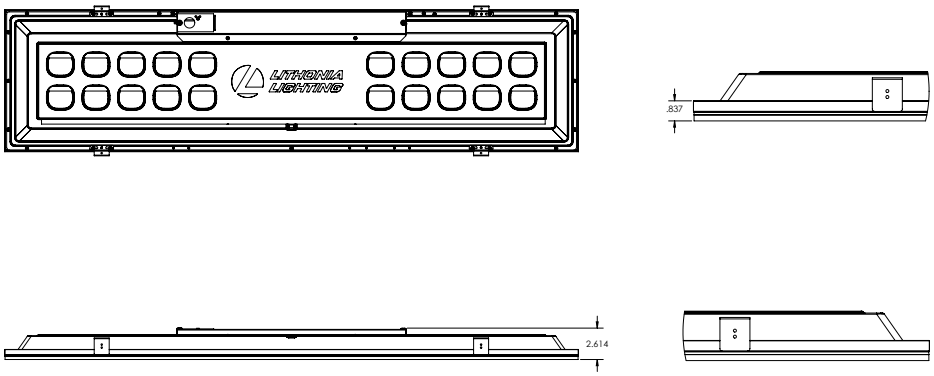

Length: 23.8" 60.5cm
Width: 23.8" 60.5cm
Depth: 2.6" 6.7 cm
Weight:
Unit: 9.45lbs
Unit Carton: 10.45lbs

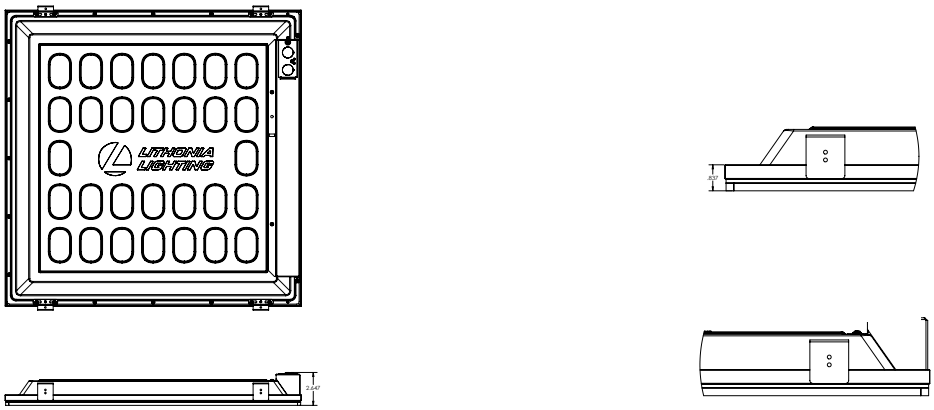

Length: 47.8" (121.4cm)
Width: 23.8" 60.5cm
Depth: 2.6" 6.7 cm
Weight:
Unit: 17.25 lbs
Unit Carton: 19.25 lbs

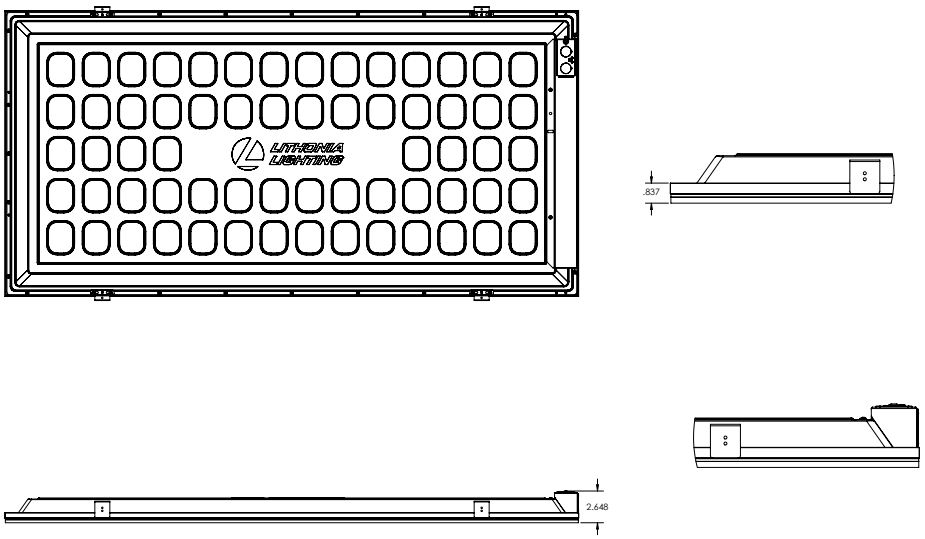

© 2024 Acuity Brands Lighting, Inc. All rights reserved. Rev. 06/13/24