Catalog Number	
Notes	Type

Petrolux® LED Low Bay

Hazardous Location for Demanding Environments

PXLH

Description

- For demanding environments with lower mounting heights where dust, dirt and moisture are a concern.
- Certain airborne contaminants may adversely affect the functioning of LEDs and other electronic components, depending on various factors such as concentrations of the contaminants, ventilation, and temperature at the end-user location. Click here for a list of substances that may not be suitable for interaction with LEDs and other electronic components.

Optics

- Prismatic borosilicate glass directs light where needed and reduces harsh glare.
- Silicone rubber lens available that will not brown, chip, shatter or break.
- Four distributions (Type 5 low angle, Type 5 high angle, type 4 forward throw and Type 1 long and narrow) available to maximize versatility.
- Highly engineered LED system ensures superior uniformity and maximizes spacing.
- Lens assembly secured by stainless steel tamper-resistant Torx® T-20 screws.

Electrical

- Luminaire Surge Protection Level: Designed to withstand up to 10kV/5kA per ANSI C82.77-5-2015.
- 0-10V dimming driver is standard. Dims to 10%.
- 3000K, 4000K or 5000K CCT available.
- Fault-tolerant LED light engine continues to provide light even in the failure of one LED.
- Field Adjustable Output (AO) module - Onboard device that adjusts the light output and input wattage to meet site specific requirements. The AO module is preset at the factory to position number 8 (see chart on page 5).
- Integrated Bluetooth occupancy sensor: The SBG BTP is bluetooth enabled with dimming photocells. Allows you to change settings in the field using the VLP app.

Mechanical

- Super durable TGIC thermoset powder coat with corrosion resistant finish is a five-stage pre-treating and painting process that yields over 5,000 hours salt rating per ASTM B117.
- Robust cast aluminum housing with low copper content (0.6% CU content) withstands harsh or hostile environments.
- Universal mount high profile top cover (ceiling/pendant). Optional universal arm available for wall/stanchion. Other mountings include a high profile yoke mount.

Mechanical (cont.)

- Precise number of fins dissipate maximum amount of heat.
- Universal mount can be wall, stanchion, and angle mounted to accommodate a variety of arms.

Listings

- UL Listed to US and Canadian Standards.
- Suitable for use in hazardous locations (UL844, see chart on page 9)
  Class I, Division 2, Groups A, B, C, D
  Class II, Division 1, Groups E, F, and G
  Class II, Division 2, Groups F and G
  Class III
- Simultaneous presence (Class I Division 2, Class II Division 1 / Class II Division 2)
- Zone Equivalency Markings (See chart on page 10)
- -40°F (-40°C) to 149°F (65°C) (see chart on page 7)
- IP65, IP66 and IP67 rated. (see Option Value Ordering Restrictions & Notes on page 3)
- 1G vibration rated.
- NEMA 4X rated (see chart on page 9)
- Marine Rated (see chart on page 9)
- IK rated (see chart on page 5)
- DesignLights Consortium® (DLC) Premium qualified product and DLC qualified product. Not all versions of this product may be DLC Premium qualified or DLC qualified. Please check the DLC Qualified Products List at www.designlights.org/QPL to confirm which versions are qualified.

Buy American Act

Product with the BAA option is assembled in the USA and meets the Buy America(n) government procurement requirements under FAR, DFARS and DOT regulations. Please refer to www.acuitybrands.com/buy-american for additional information.

Warranty

5-year limited warranty. This is the only warranty provided and no other statements in this specification sheet create any warranty of any kind. All other express and implied warranties are disclaimed. Complete warranty terms located at: www.acuitybrands.com/support/warranty/terms-and-conditions

Note: Actual performance may differ as a result of end-user environment and application.
All values are design or typical values, measured under laboratory conditions at 25 °C.

Typical Applications

- Petroleum refineries
- Ethanol facilities
- Chemical plants
- Power plants
- Textile mills
- Water and wastewater treatment facilities

Dimensions: *Inches (millimeters) unless otherwise noted.*

Diameter: 13.11 in. (332.99 mm.)
UNM Height: 11.43 in. (290.32 mm.)
PM Height: 10.48 in. (266.19 mm.)
Weight: 19 lbs. (8.62 Kg.)
Pallet Quantity: 12 fixtures
EPA: .787 ft^2

A+ Capable Luminaire

This item is an A+ capable luminaire, which has been designed and tested to provide consistent color appearance and out-of-the-box control compatibility with simple commissioning.

- All configurations of this luminaire meet the Acuity Brands' specification for chromatic consistency
- This luminaire is part of an A+ Certified solution for nLight® control networks marked by a shaded background*

To learn more about A+, visit www.acuitybrands.com/aplus.

*See ordering tree for details

© 2019-2023 Acuity Brands Lighting, Inc. All rights reserved. Rev. 12/13/23 Specifications subject to change without notice.

A+ Capable options indicated by this color background.

ORDERING INFORMATION

Example: PXLH 3000LM MDU5 MVOLT 40K 80CRI UNM DGXD

Series	Lumen Package		Distribution		Voltage		Color Temperature		Color Rendering Index		Mounting	
PXLH	3000LM	3,000 lumens	FWD	Forward throw, glass lens	MVOLT	(120V-277V, 50/60Hz)	30K	3000K CCT	70CRI	70CRI	UNM	Universal Mount, high profile top cap ‡
	5000LM	5,000 lumens	LND	Long and Narrow, glass lens	120	120V, 50/60Hz	40K	4000K CCT	80CRI	80CRI	PM	Pendant Mount, low profile top cap ‡
	8000LM	8,000 lumens	MD0	Medium, glass lens, with minimal uplight	208	208V, 50/60Hz	50K	5000K CCT	90CRI	90CRI	YK90	Yoke Mount 0-90 Degree, high profile top cap ‡
	10000LM	10,000 lumens	MDU5	Medium, glass lens, with uplight	240	240V, 50/60Hz						
			MDU5FR	Medium, frosted glass lens, with uplight	277	277V, 50/60Hz						
			SO	Medium, silicon optic, with minimal uplight ‡	HVOLT	(347V-480V, 50/60Hz)						
			SOLND	Long and Narrow, silicone optic ‡	347	347V, 50/60Hz						
			WD	Wide, glass lens	480	480V, 50/60Hz						
					125VDC	125V, DC Driver ‡						
					250VDC	250V, DC Driver ‡						

Options

Wet Location Cords (No Plug): ‡

CNP16WWL3FT	Cord only, 16-gauge, 3 conductors, white, 3ft
CNP164CWL3FT	Cord only, 16-gauge, 4 conductors, black, 3ft ‡
CNP164CWWL3FT	Cord only, 16-gauge, 4 conductors, white, 3ft ‡
CNP165CDWL3FT	Cord only, 16-gauge, 5 conductors, includes 0-10V dimming leads, black, 3ft ‡
CNP165CDWWL3FT	Cord only, 16-gauge, 5 conductors, includes 0-10V dimming leads, white, 3ft ‡

Mounting Accessories:

072331	Substation arm for a single luminaire, down orientation only ‡
072331CTL	Substation arm for a single luminaire with integral sensor, down orientation only ‡
P3US	Universal arm for wall or stanchion mount ‡
P3US35	35° Universal arm for wall or stanchion mount ‡

Individual Non-Dimming Sensors: ‡

SBGR10	360° Low Mount Sensor, (8-15' mounting heights), on/off occupancy (LINK)
SBGR10 P	360° Low Mount Sensor, (8-15' mounting heights), on/off photocell (LINK)

Individual Dimming Sensor: ‡

SBGR10 D 3V	360° Low Mount sensor, (8-15' mounting heights), high/low occupancy dimming (LINK)

Bluetooth® Sensors: ‡

SBG10 OCC BTP	360° Low Mount Sensor, (7-15' mounting heights), on/off occupancy, utilizes smart hub for Bluetooth® programmability (LINK)
SBG10 HL BTP	360° Low Mount Sensor, (7-15' mounting heights), high/low/(off) occupancy dimming, utilizes smart hub for Bluetooth® programmability (LINK)
SBG10 ADC BTP	360° Low Mount Sensor, (7-15' mounting heights), on/off occupancy with auto dimming photocell, utilizes smart hub for Bluetooth® programmability (LINK)
SBG10 ANL BTP	360° Low Mount Sensor, (7-15' mounting heights), high/low/(off) occupancy dimming with auto dimming photocell, utilizes smart hub for Bluetooth® programmability (LINK)

Emergency:

BSL310HAZSB	10.4W Internal hazardous location emergency driver, 0°C min, UL924 Compliant, Certified in CA Title 20 MAEDBS ‡

Other Options:

AO	Field Adjustable Output, Standard setting is 8 ‡
BAA	Buy America(n) Act Compliant
BP	Button style photo control ‡
EMD	Ingress/Egress Marker Decal
NSG	Non Silicone Gasket (EPDM) ‡
PC	Pendant Cone ‡
UPS	Uplight Shield ‡
WGX	Zinc coated wire guard, factory installed

Finish

DBXD	Black super durable, corrosion resistant ‡
DGXD	Gray super durable, corrosion resistant ‡
DWHXD	White super durable, corrosion resistant ‡

NOTE: ‡ indicates option chosen has ordering restrictions. Please reference ordering restrictions chart.

Accessories: *Order as separate catalog number.*

072331 XX CR	Substation arm for a single luminaire, down orientation only, XX denotes color ‡
072331 CTL XX CR	Substation arm for a single luminaire with sensor, down orientation only. XX denotes color ‡
HSCKX	X inch safety chain kit ‡
MI3502 THREAD SEAL	Thread Sealant ‡
P3US XX CR	Universal arm for wall or stanchion mount, XX denotes color ‡
P3US35 XX CR	35° Universal arm for wall or stanchion mount, XX denotes color ‡
PCPXLW XX CR	Pendant Cone, XX denotes color ‡
UPSPXLW XX CR	Uplight shield, XX denotes color ‡
WGPXLW	Zinc coated wire Guard

For Footnotes, see next page.

© 2019-2023 Acuity Brands Lighting, Inc. All rights reserved. Rev. 12/13/23 Specifications subject to change without notice.

‡ Option Value Ordering Restrictions & Notes	
Option value	**Restriction**
072331CTL, 072331 CTL XX CR	Not available with YK90, cord or cordset. Requires PM or UNM mounting. Includes one 3 conductor input feed cable. **Not IP or NEMA4X rated. Wet location rated.**
072331, 072331 XX CR	Not available with YK90, cord or cordset. Requires PM or UNM mounting. Includes one 5 conductor input feed cable with input power and 0-10V dimming leads. **Not IP or NEMA4X rated. Wet location rated.**
125VDC, 250VDC	Not available with BP.
AO	Not available with BSL310HAZSB, CNP165CDWL3FT, CNP165CDWWL3FT, SBGR10 D 3V individual dimming sensor or SBG10 BTP Bluetooth sensors. **Not CI D2 rated.**
Bluetooth® Sensors	Not available with HVOLT in the 3000LM or 5000LM lumen packages. BTP sensor options with 3000LM or 5000LM lumen packages cannot dim to OFF. These lumen packages will dim to 10% minimum and cannot be turned OFF with controls. Not available with CNP165CDWL3FT, CNP165CDWWL3FT, AO or BSL310HAZSB in any lumen package. **IP65 and IP66 rated. Not CII D1, Marine or NEMA4 rated.**
BP	Not available with MVOLT, HVOLT, 480, 125VDC or 250VDC. **Not CII D1, Marine or NEMA4X rated**.
BSL310HAZSB	Utilizes Bodine BSL310HAZSB emergency driver. Available with SBGR10 or SBGR10 P individual non-dimming sensors. Not available with AO adjustable output, PM mounting, HVOLT, 347, 480, SBGR10 D 3V individual dimming sensor or SBG10 BTP Bluetooth sensors. Available with CNP164CWL3FT or CNP164CWWL3FT, but not required. **Not Marine or NEMA4 rated.**
CNP164CWL3FT, CNP164CWWL3FT	Available with BSL310HAZSB battery only. **Not Marine or NEMA4X rated**.
CNP165CDWL3FT, CNP165CDWWL3FT	Not available with AO adjustable output, SBG BTP bluetooth sensors, BSL310HAZSB battery or SBG individual dimming and non-dimming sensors. **Not Marine or NEMA4X rated.**
DBXD	Corrosion resistant finish is standard. **Not Marine or NEMA4X rated**.
DGXD	Corrosion resistant finish is standard.
DWHXD	Corrosion resistant finish is standard. **Not NEMA4X rated**.
HSCKX	X denotes length. Available in multiple sizes. Replace X with size in inches. Example: HSCK120 = 120 inches or 10 feet.
Individual Dimming Sensor	Not available with CNP165CDWL3FT, CNP165CDWWL3FT or AO. **IP65 and IP66 rated. Not CI D2, CII D1, Marine or NEMA4X rated**.
Individual Non-Dimming Sensors	**IP65 and IP66 rated. Not CI D2, CII D1, Marine or NEMA4X rated**.
MI3502 THREAD SEAL	Order one per luminaire, 6ml tube.
NSG	Not available with SO or SOND. **Not CII D1, CII D2, CIII, Marine or NEMA4X rated.**
P3US, P3US XX CR, P3US35, P3US35 XX CR	Not available with PM, YK90 or cord. Requires UNM mounting. **Not IP, Marine or NEMA4X rated. Wet location rated.**
PC, PCPXLW XX CR	Not available with UNM or YK90. Requires PM Mounting. Requires minimum 8" customer provided stem. **Not Marine or NEMA4X rated.**
PM	Not available with BSL310HAZSB battery. Ships with 3/4" NPT pendant opening.
SO, SOLND	**Not CII D1, Marine or NEMA4X rated**.
UNM	Includes provisions for 3/4" NPT pendant mount and ceiling mount. When ordered with the P3US universal mounting arm, includes provisions for 1.5" NPT stanchion mount and wall mount.
UPS, UPSPXLW XX CR	When paired with any sensor option, the sensor viewing angle will be cutoff.
Wet Location Cords (No Plug)	Available with YK90 only. **Not Marine or NEMA4X rated.**
YK90	When used with a sensor, not rated for wet location beyond 35 degree tilt. **Not Marine rated.**

DIMENSIONAL DATA

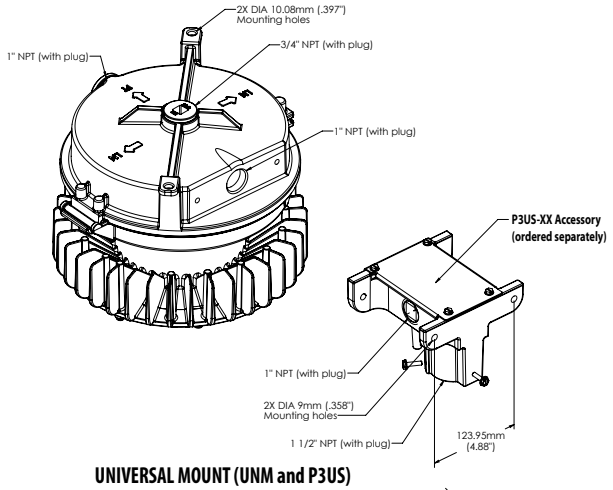

UNIVERSAL MOUNT (UNM and P3US)

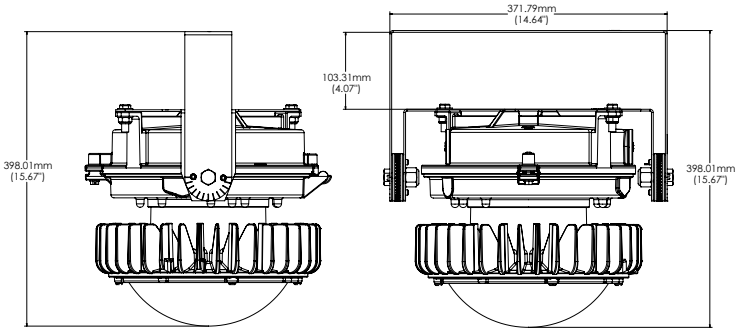

YOKE MOUNT 0-90° (YK90)

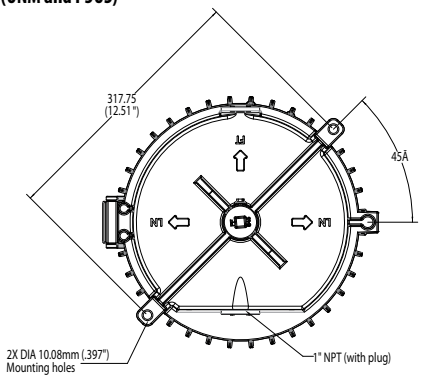

CEILING MOUNT (UNM)

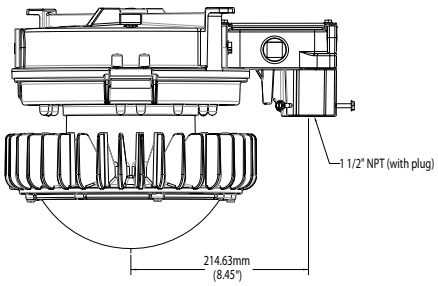

UNIVERSAL MOUNT (UNM and P3US)
(P3US ordered separately)

© 2019-2023 Acuity Brands Lighting, Inc. All rights reserved. Rev. 12/13/23 Specifications subject to change without notice.

DIMENSIONAL DATA (continued)

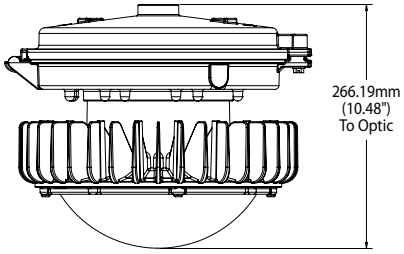

PENDANT MOUNT (PM)

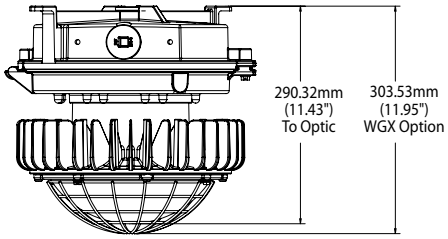

WIRE GUARD OPTION (UNM and WGX)

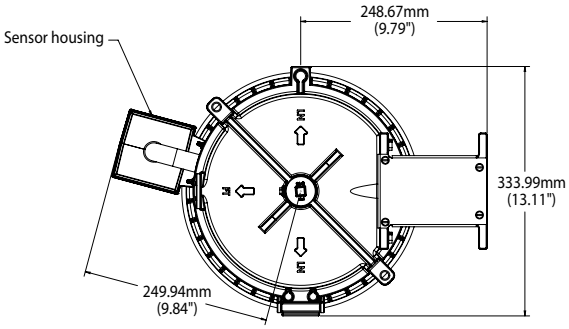

SENSOR OPTION (UNM and P3US)
(P3US ordered separately)

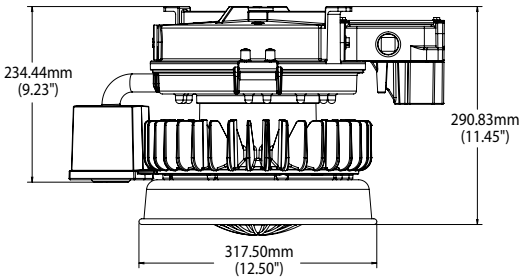

UPLIGHT SHIELD OPTION
(UNM, P3US, SENSOR and UPS)
(P3US ordered separately)

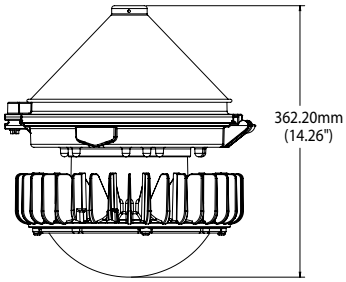

PENDANT CONE ACCESSORY (PM and PC)

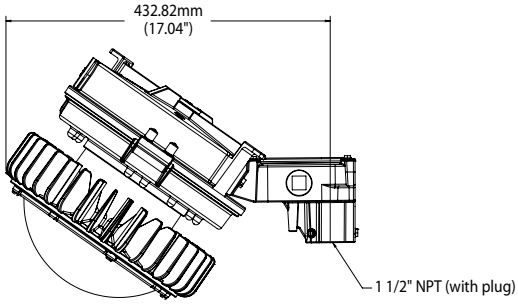

UNIVERSAL MOUNTING (UNM and P3US35)
(P3US35 ordered separately)

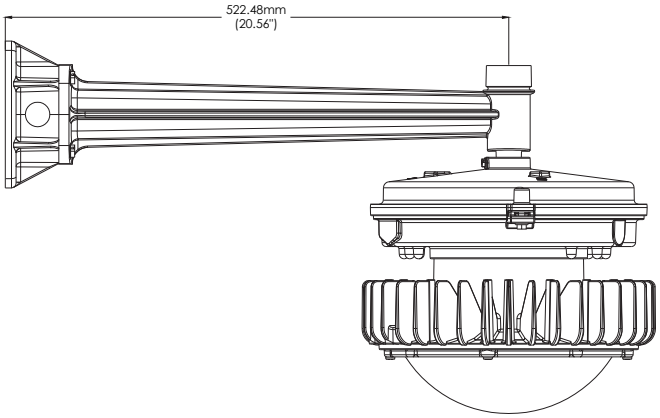

072331 SUBSTATION ARM (PM) - AVAILABLE AS DOWN ORIENTATION ONLY

© 2019-2023 Acuity Brands Lighting, Inc. All rights reserved. Rev. 12/13/23 Specifications subject to change without notice.

OPERATIONAL DATA

Performance with AO Field Adjustable Output

FAO Setting	Base Max Lumen Output %
1	35%
2	48%
3	61%
4	74%
5	87%
6	100%
7	100%
8	100%

Number of LED Boards and Drivers Used

Lumen Package	Number of LED boards per fixture	Number of drivers per fixture
3000LM	1	1
5000LM	1	1
8000LM	1	1
10000LM	1	1

Impact Resistance (IK Ratings)

Lens Material	Rating
Glass	IK07
Silicone	IK10

Projected Lumen Maintenance (TM-21)

25C ambient						
Lumen Package	0 Hours	15,000 Hours	30,000 Hours	45,000 Hours	60,000 Hours	100,000 Hours
3,000LM	1	0.97	0.95	0.92	0.9	0.84
5,000LM	1	0.97	0.95	0.92	0.9	0.84
8,000LM	1	0.97	0.94	0.92	0.89	0.83
10,000LM	1	0.97	0.95	0.92	0.9	0.84

55C ambient						
Lumen Package	0 Hours	15,000 Hours	30,000 Hours	45,000 Hours	60,000 Hours	100,000 Hours
3,000LM	1	0.97	0.94	0.91	0.88	0.81
5,000LM	1	0.97	0.94	0.91	0.89	0.82
8,000LM	1	0.96	0.93	0.89	0.86	0.78
10,000LM	1	0.96	0.93	0.9	0.87	0.79

Default Bluetooth Sensor Programming

Model	Default Operation	Occupancy Time Delay	Photocell Mode	Photocell Set-point	Low Trim	High Trim	Dim to Off Time Delay
SBG10 OCC BTP	On/Off Occupancy Only	10 minutes	Disabled	n/a	n/a	100%	Disabled
SBG10 HL BTP	Occupancy w/ 0-10V Dimming (High/Low/Off)	10 minutes	Disabled	n/a	10%	100%	2.5 minutes
SBG10 ADC BTP	On/Off Occupancy with Auto Dimming Photocell	10 minutes	On/Off & Auto Dim	50 fc	10%	100%	0 seconds
SBG10 ANL BTP	High/Low/(Off) Occupancy Dimming with Auto Dimming Photocell	10 minutes	On/Off & Auto Dim	50 fc	10%	100%	Stay Dim/Never Off

© 2019-2023 Acuity Brands Lighting, Inc. All rights reserved. Rev. 12/13/23 Specifications subject to change without notice.

Operating Characteristics ‡

Lumens	Distribution	Input Watts ‡	3000K			4000K			5000K			
			70CRI	80CRI	90CRI	70CRI	80CRI	90CRI	70CRI	80CRI	90CRI	
3000LM	FWD	21	2848	2621	2166	2988	2726	2184	3110	2760	2201	Lumens
			136	125	103	142	130	104	148	131	105	LPW
	LND	21	2698	2483	2053	2831	2583	2069	2947	2616	2086	Lumens
			128	118	98	135	123	99	140	125	99	LPW
	MD0	21	3034	2792	2308	3183	2904	2327	3314	2941	2346	Lumens
			144	133	110	152	138	111	158	140	112	LPW
	MDU5	21	3020	2780	2298	3169	2891	2316	3298	2928	2335	Lumens
			144	132	109	151	138	110	157	139	111	LPW
	MDU5FR	21	2700	2485	2054	2833	2584	2071	2949	2617	2087	Lumens
			129	118	98	135	123	99	140	125	99	LPW
	SO	21	3182	2928	2421	3338	3045	2440	3475	3084	2460	Lumens
			152	139	115	159	145	116	165	147	117	LPW
	SOLND	21	2850	2623	2168	2990	2728	2186	3113	2763	2203	Lumens
			136	125	103	142	130	104	148	132	105	LPW
	WD	21	3098	2851	2357	3250	2965	2376	3383	3003	2395	Lumens
			148	136	112	155	141	113	161	143	114	LPW

Lumens	Distribution	Input Watts ‡	3000K			4000K			5000K			
			70CRI	80CRI	90CRI	70CRI	80CRI	90CRI	70CRI	80CRI	90CRI	
5000LM	FWD	35	4851	4465	3691	5090	4643	3720	5298	4703	3750	Lumens
			139	128	105	145	133	106	151	134	107	LPW
	LND	35	4597	4230	3497	4822	4399	3525	5020	4456	3553	Lumens
			131	121	100	138	126	101	143	127	102	LPW
	MD0	35	5169	4757	3932	5423	4947	3964	5645	5011	3996	Lumens
			148	136	112	155	141	113	161	143	114	LPW
	MDU5	35	5146	4735	3914	5398	4925	3946	5619	4988	3978	Lumens
			147	135	112	154	141	113	161	143	114	LPW
	MDU5FR	35	4600	4233	3499	4826	4402	3527	5023	4459	3556	Lumens
			131	121	100	138	126	101	144	127	102	LPW
	SO	35	5421	4988	4124	5687	5188	4157	5920	5254	4190	Lumens
			155	143	118	162	148	119	169	150	120	LPW
	SOLND	35	4856	4468	3694	5094	4647	3724	5303	4707	3754	Lumens
			139	128	106	146	133	106	152	134	107	LPW
	WD	35	5278	4857	4015	5537	5051	4047	5764	5116	4080	Lumens
			151	139	115	158	144	116	165	146	117	LPW

Lumens	Distribution	Input Watts ‡	3000K			4000K			5000K			
			70CRI	80CRI	90CRI	70CRI	80CRI	90CRI	70CRI	80CRI	90CRI	
8000LM	FWD	58	7750	7132	5896	8131	7417	5943	8463	7513	5991	Lumens
			134	123	102	140	128	102	146	130	103	LPW
	LND	58	7344	6758	5586	7704	7028	5632	8019	7118	5677	Lumens
			127	117	96	133	121	97	138	123	98	LPW
	MD0	58	8258	7599	6282	8663	7903	6333	9018	8005	6384	Lumens
			142	131	108	149	136	109	155	138	110	LPW
	MDU5	58	8220	7564	6253	8623	7867	6304	8976	7968	6354	Lumens
			142	130	108	149	136	109	155	137	110	LPW
	MDU5FR	58	7348	6762	5590	7709	7033	5635	8025	7123	5680	Lumens
			127	117	96	133	121	97	138	123	98	LPW
	SO	58	8660	7969	6588	9085	8288	6641	9457	8394	6694	Lumens
			149	137	114	157	143	115	163	145	115	LPW
	SOLND	58	7757	7139	5901	8138	7424	5949	8471	7519	5996	Lumens
			134	123	102	140	128	103	146	130	103	LPW
	WD	58	8432	7759	6414	8845	8069	6466	9208	8173	6518	Lumens
			145	134	111	153	139	111	159	141	112	LPW

Notes ‡	
Input Watts	120 volts.
Operating Characteristics	Absolute photometry calculated in accordance with IESNA LM-79-08 @ 25°C.

© 2019-2023 Acuity Brands Lighting, Inc. All rights reserved. Rev. 12/13/23 Specifications subject to change without notice.

Operating Characteristics ‡

Lumens	Distribution	Input Watts ‡	3000K			4000K			5000K			
			70CRI	80CRI	90CRI	70CRI	80CRI	90CRI	70CRI	80CRI	90CRI	
10000LM	FWD	74	9796	9014	7452	10276	9375	7512	10697	9495	7572	Lumens
			132	122	101	139	127	102	145	128	102	LPW
	LND	74	9281	8541	7061	9737	8883	7118	10136	8997	7175	Lumens
			125	115	95	132	120	96	137	122	97	LPW
	MD0	74	10437	9605	7940	10950	9989	8004	11398	10117	8068	Lumens
			141	130	107	148	135	108	154	137	109	LPW
	MDU5	74	10389	9561	7904	10899	9943	7967	11345	10071	8031	Lumens
			140	129	107	147	134	108	153	136	109	LPW
	MDU5FR	74	9287	8547	7065	9743	8889	7122	10142	9003	7179	Lumens
			126	116	95	132	120	96	137	122	97	LPW
	SO	74	10945	10072	8326	11482	10475	8393	11952	10609	8461	Lumens
			148	136	113	155	142	113	162	143	114	LPW
	SOLND	74	9804	9022	7458	10285	9383	7519	10707	9504	7579	Lumens
			132	122	101	139	127	102	145	128	102	LPW
	WD	74	10657	9807	8107	11180	10199	8172	11637	10330	8238	Lumens
			144	133	110	151	138	110	157	140	111	LPW

Notes ‡	
Input Watts	120 volts.
Operating Characteristics	Absolute photometry calculated in accordance with IESNA LM-79-08 @ 25°C.

Ambient Temperature Ratings

Mounting	OCC Sensor: SBGR	BTP Sensor: SBG BTP	Battery: BSL310HAZSB	Voltage	Lumens				Supply Wire
					3000LM	5000LM	8000LM	10000LM	
PM UNM YK90	N	N	N	Any	-40°C to 65°C	-40°C to 65°C	-40°C to 60°C	-40°C to 55°C	90°C
			Y	120-277	0°C to 40°C	0°C to 40°C	0°C to 35°C	0°C to 35°C	90°C
		Y	N	Any	-40°C to 60°C	-40°C to 60°C	-40°C to 60°C	-40°C to 55°C	90°C
	Y	N	N	Any	-40°C to 65°C	-40°C to 65°C	-40°C to 60°C	-40°C to 55°C	90°C
			Y	120-277	0°C to 40°C	0°C to 40°C	0°C to 35°C	0°C to 35°C	90°C

© 2019-2023 Acuity Brands Lighting, Inc. All rights reserved. Rev. 12/13/23 Specifications subject to change without notice.

Glass Lens (MD0, MDU5, MDU5GLF, WD, ND, FWD)

40C° Ambient			
Lumen Package	C1D2	C2D1/C2D2/C3	Simultaneous C1 and C2
3000LM	T4	T6	T3
5000LM	T4	T6	T2C
8000LM	T4	T6	T3
10000LM MVOLT	T2C	T6	T3
10000LM HVOLT	T2	T4	T2C

60C° Ambient			
Lumen Package	C1D2	C2D1/C2D2/C3	Simultaneous C1 and C2
3000LM	T4	T6	T2C
5000LM	T3A	T6	T2C
8000LM	T4	T6	T2C
10000LM MVOLT	N/A	N/A	N/A
10000LM HVOLT	N/A	N/A	N/A

55C° Ambient			
Lumen Package	C1D2	C2D1/C2D2/C3	Simultaneous C1 and C2
3000LM	T3C	T6	T2D
5000LM	T3	T6	T2D
8000LM	T3C	T6	T2D
10000LM MVOLT	T3	T6	T2D
10000LM HVOLT	T2A	T3C	T2

65C° Ambient			
Lumen Package	C1D2	C2D1/C2D2/C3	Simultaneous C1 and C2
3000LM	T3C	T6	T2C
5000LM	T3A	T6	T2C
8000LM	N/A	N/A	N/A
10000LM MVOLT	N/A	N/A	N/A
10000LM HVOLT	N/A	N/A	N/A

Silicone Lens (SO, SOND)

40C° Ambient			
Lumen Package	C1D2	C2D2/C3	Simultaneous C1 and C2
3000LM	T4	T6	T2A
5000LM	T4	T6	T2A
8000LM	T4	T6	T2A
10000LM MVOLT	T2C	T6	T2A
10000LM HVOLT	T2	T6	T2A

60C° Ambient			
Lumen Package	C1D2	C2D2/C3	Simultaneous C1 and C2
3000LM	T4	T5	T2
5000LM	T3A	T5	T2
8000LM	T4	T5	T2
10000LM MVOLT	N/A	N/A	N/A
10000LM HVOLT	N/A	N/A	N/A

55C° Ambient			
Lumen Package	C1D2	C2D2/C3	Simultaneous C1 and C2
3000LM	T3C	T5	T2
5000LM	T3	T5	T2
8000LM	T3C	T5	T2
10000LM MVOLT	T3	T5	T2
10000LM HVOLT	T2A	T5	T2

65C° Ambient			
Lumen Package	C1D2	C2D2/C3	Simultaneous C1 and C2
3000LM	T3C	T4A	T1
5000LM	T3A	T4A	T1
8000LM	N/A	N/A	N/A
10000LM MVOLT	N/A	N/A	N/A
10000LM HVOLT	N/A	N/A	N/A

Emergency Lumen Output

How to Estimate Delivered Lumens in Emergency Mode
Use the formula below to estimate the delivered lumens in emergency mode
Delivered Lumens = P x LPW
P = Output power of emergency driver
LPW = Lumen per watt rating of the luminaire. (See charts on page 7)
The LPW rating is also available at Designlight Consortium

P = 10 watts for BSL310HAZSB

Emergency Lumen Output Example - 10 Watt Battery

Approximate Luminaire Efficacy	Approximate Lumens at 1 Minute	Approximate Lumens at 45 Minutes	Approximate Lumens at 90 Minutes
100 LPW	1000	1000	**1000**
110 LPW	1100	1100	**1100**
120 LPW	1200	1200	**1200**
130 LPW	1300	1300	**1300**
140 LPW	1400	1400	**1400**
150 LPW	1500	1500	**1500**

© 2019-2023 Acuity Brands Lighting, Inc. All rights reserved. Rev. 12/13/23 Specifications subject to change without notice.

Hazardous Compatibility

Option Group	Options	Class I, Division 2	Class II, Division 1	Class II, Division 2	Class III
Distribution	FWD, MD0, MDU5, MDU5FR, LND, WD	YES	YES	YES	YES
	SO, SOLND	YES	NO	YES	YES
Mounting	PM, UNM, YK90	YES	YES	YES	YES
Finish	DBXD, DGXD, DWHXD	YES	YES	YES	YES
Cordsets	Any Cordset	YES	YES	YES	YES
Individual Sensors	SBGR10, SBGR10 P, SBGR10 D 3V	NO	NO	YES	YES
Bluetooth Sensors	SBG10 OCC BTP, SBG10 HL BTP, SBG10 ADC BTP, SBG10 ANL BTP	YES	NO	YES	YES
Emergency	BSL310HAZSB	YES	YES	YES	YES
Options	AO	NO	YES	YES	YES
	BP	YES	NO	YES	YES
	EMD	YES	YES	YES	YES
	NSG	YES	NO	NO	NO
	PC, PCPXLW	YES	YES	YES	YES
	UPS, UPSPXLW	YES	YES	YES	YES
	WGX, WGPXLW	YES	YES	YES	YES
Mounting Accessories	072331, 072331CTL	YES	NO	YES	YES
	P3US, P3US35	YES	YES	YES	YES

Marine/NEMA4X Compatibility

Option Group	Options	Marine	NEMA4X
Distribution	FWD, MD0, MDU5, MDU5FR, LND, WD	YES	YES
	SO, SOLND	NO	NO
Mounting	PM, UNM	YES	YES
	YK90	NO	YES
Finish	DBXD	NO	NO
	DGXD	YES	YES
	DWHXD	YES	NO
Cordsets	Any Cordset	NO	NO
Individual Sensors	SBGR10, SBGR10 P, SBGR10 D 3V	NO	NO
Bluetooth Sensors	SBG10 OCC BTP, SBG10 HL BTP, SBG10 ADC BTP, SBG10 ANL BTP	NO	NO
Emergency	BSL310HAZSB	NO	NO
Photocontrol	BP	NO	NO
Options	AO	YES	YES
	EMD	YES	YES
	NSG	NO	NO
	PC, PCPXLW	NO	NO
	UPS, UPSPXLW	YES	YES
	WGX, WGPXLW	YES	YES
Mounting Accessories	072331, 072331CTL	YES	NO
	P3US, P3US35	NO	NO

© 2019-2023 Acuity Brands Lighting, Inc. All rights reserved. Rev. 12/13/23 Specifications subject to change without notice.

Zone Equivalency Markings

NEC Protections			
Area	**Protection Techniques**	**Zone Equivalency Markings**	
Class I			
Division 2	Hermetically-sealed	CLASS I, DIV 2, GROUP D	CLASS I, ZONE 2 GROUP IIA
	Nonincendive	CLASS I, DIV 2, GROUP C	CLASS I, ZONE 2 GROUP IIB
	Non-sparking	CLASS I, DIV 2, GROUP B	CLASS I, ZONE 1 GROUP IIB PLUS HYDROGEN
	Purged/Pressurized (Type Z)	CLASS I, DIV 2, GROUP A & CLASS I, DIV 2, GROUP B	CLASS I, ZONE 2 GROUP IIC
	Any Class I, Division 1 technique		
	Any Class I, Zone 0, 1, or 2 technique		
Class II			
Division 1	Intrinsic Safety	CLASS II, DIV 1 GROUP E, F, OR G	CLASS II ZONE 20 AND ZONE 21
	Dust-ignitionproof		
	Pressurized		
Division 2	Dust tight	CLASS II, DIV 2, GROUP F OR G	CLASS II, ZONE 22
	Hermetically-sealed		
	Nonincendive		
	Pressurized		
	Any Class II, Division 1 technique		
Class III			
Division 1	Intrinsic Safety	N/A	N/A
	Dust tight		
	Hermetically-sealed		
Division 2	Nonincendive	N/A	N/A
	Any Class III, Division 1 technique		

Options and Accessories

SBGR Sensor

SBG BTP Sensor and BTP Smarthub Control Module

AO Adjustable Output

PM Pendant Mount

UNM Universal Mount and WGX Wire Guard

YK90 Yoke Mount

© 2019-2023 Acuity Brands Lighting, Inc. All rights reserved. Rev. 12/13/23 Specifications subject to change without notice.